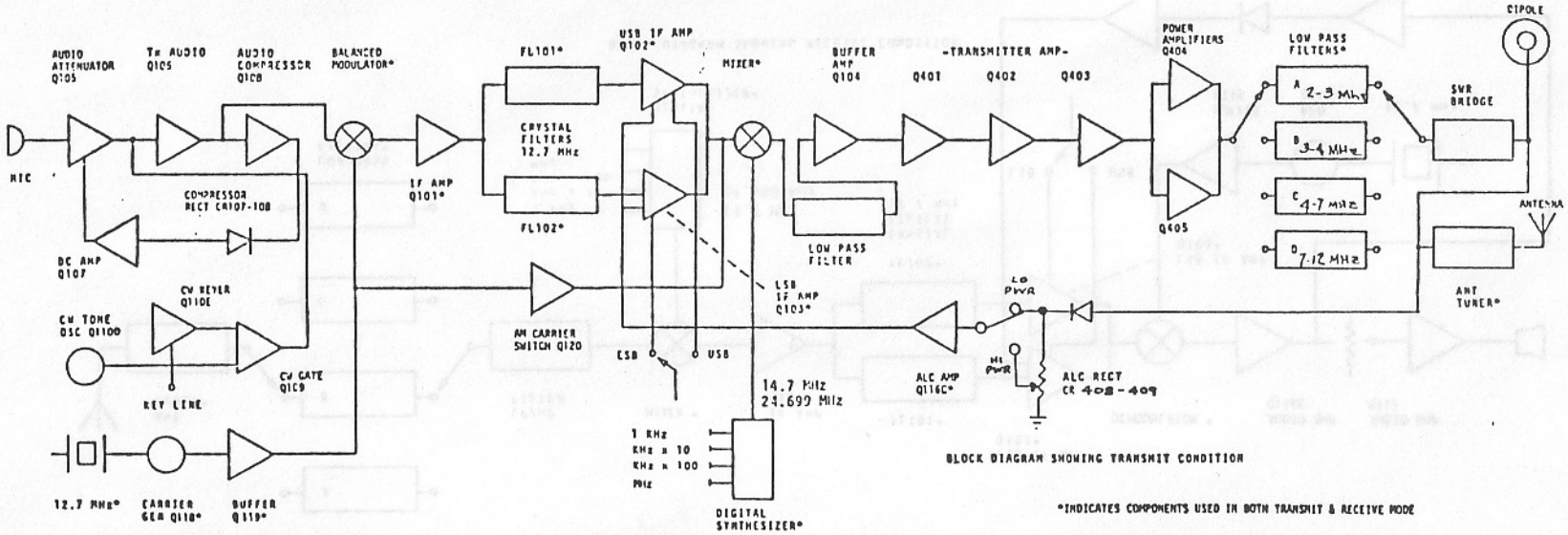

BLOCK DIAGRAM SHOWING TRANSMIT CONDITION

*INDICATES COMPONENTS USED IN BOTH TRANSMIT & RECEIVE MODE

Figure 3.1. SC130D(E) In Transmit Mode

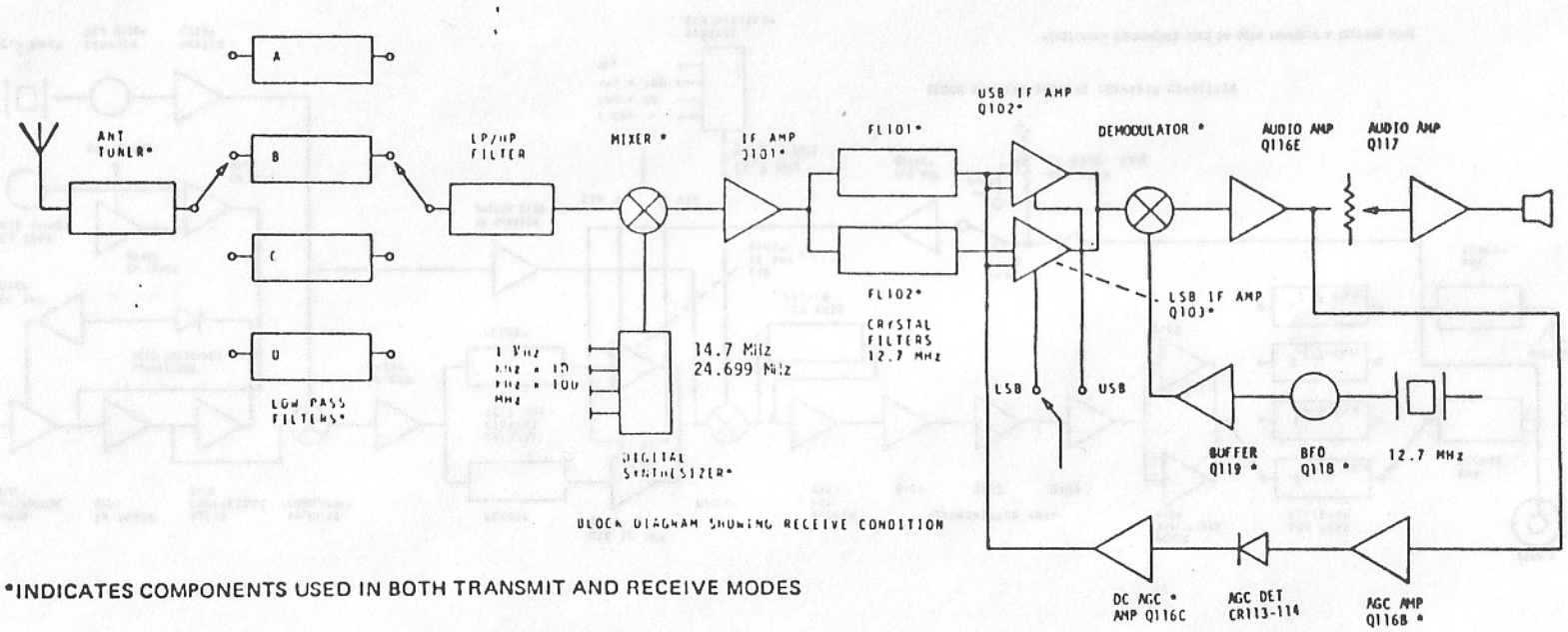

BLOCK DIAGRAM SHOWING RECEIVE CONDITION

*INDICATES COMPONENTS USED IN BOTH TRANSMIT AND RECEIVE MODES

Figure 3.2. SC130D(E) In Receive Mode

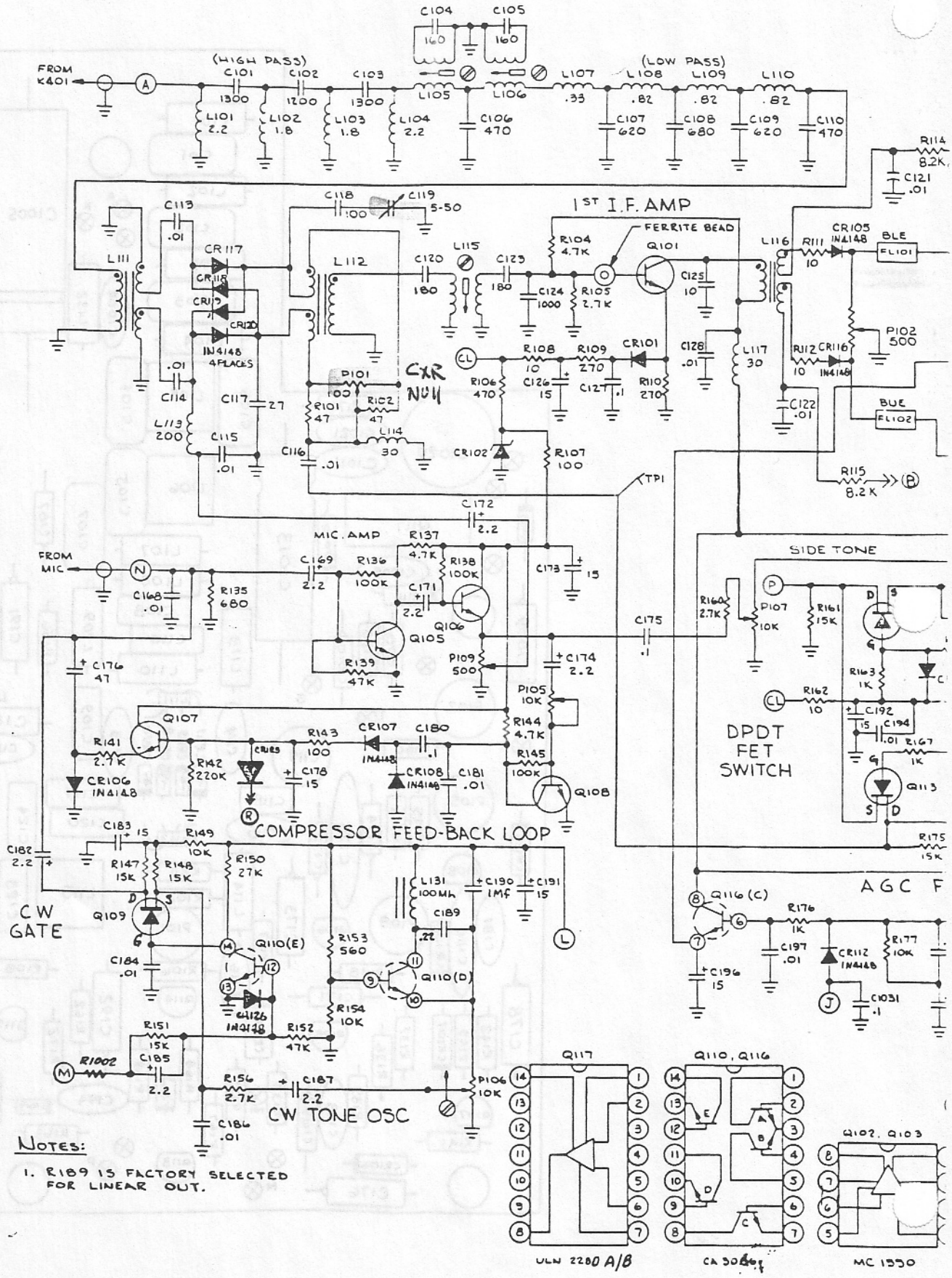

NOTES:

1. R189 IS FACTORY SELECTED FOR LINEAR OUT.

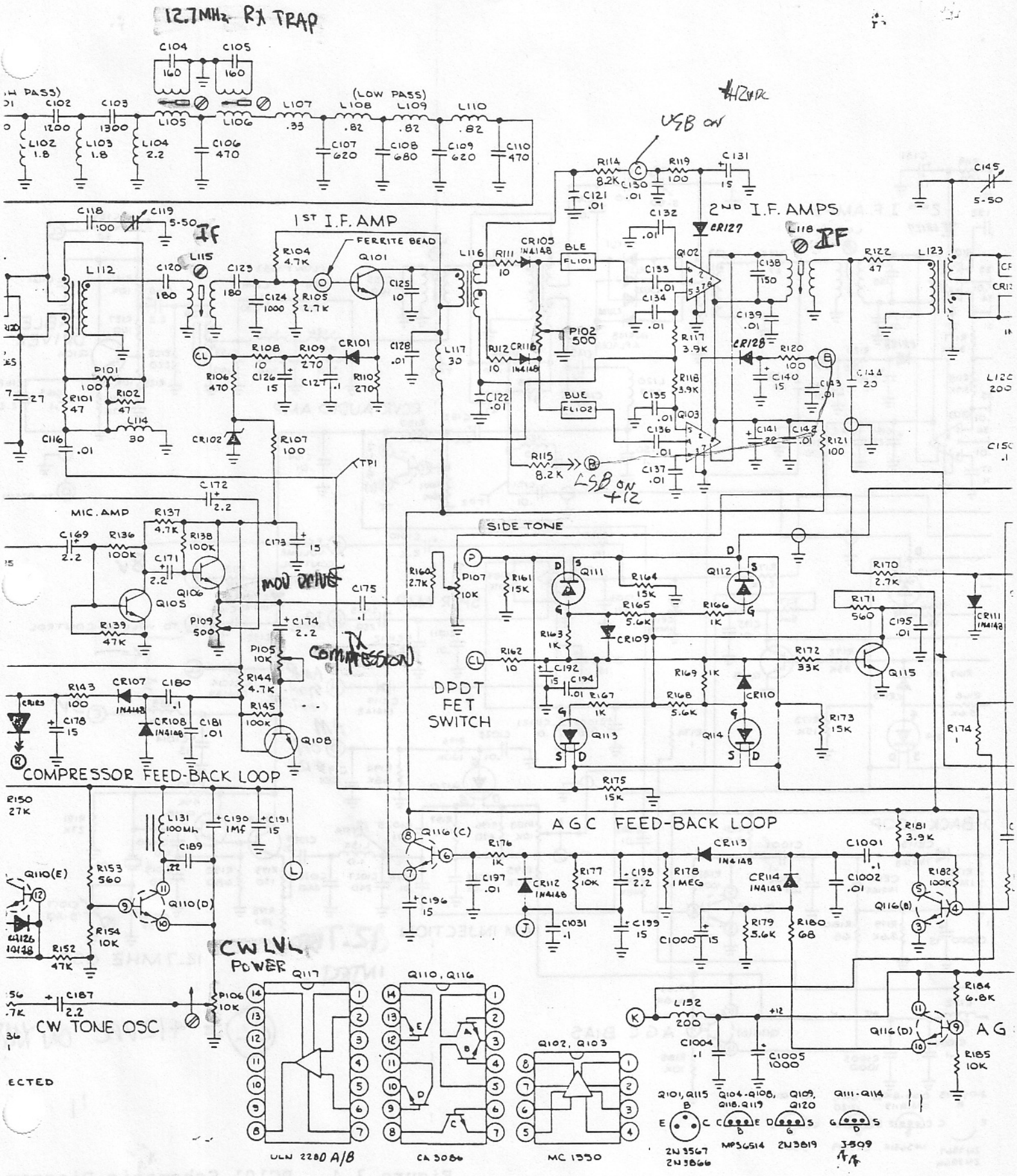
12.7MHz RX TRAP
(LOW PASS)
USB on
1ST I.F. AMP
2ND I.F. AMPS
FERRITE BEAD
IF
MIC. AMP
MOD DRIVE
TX COMPRESSION
SIDE TONE
DPDT FET SWITCH
COMPRESSOR FEED-BACK LOOP
AGC FEED-BACK LOOP
CW LVL POWER
CW TONE OSC
LSB on +12
ULN 2280 A/B
CA 3086
MC 1350
2N3567 2N3866
MPS6514
2N3819
J309

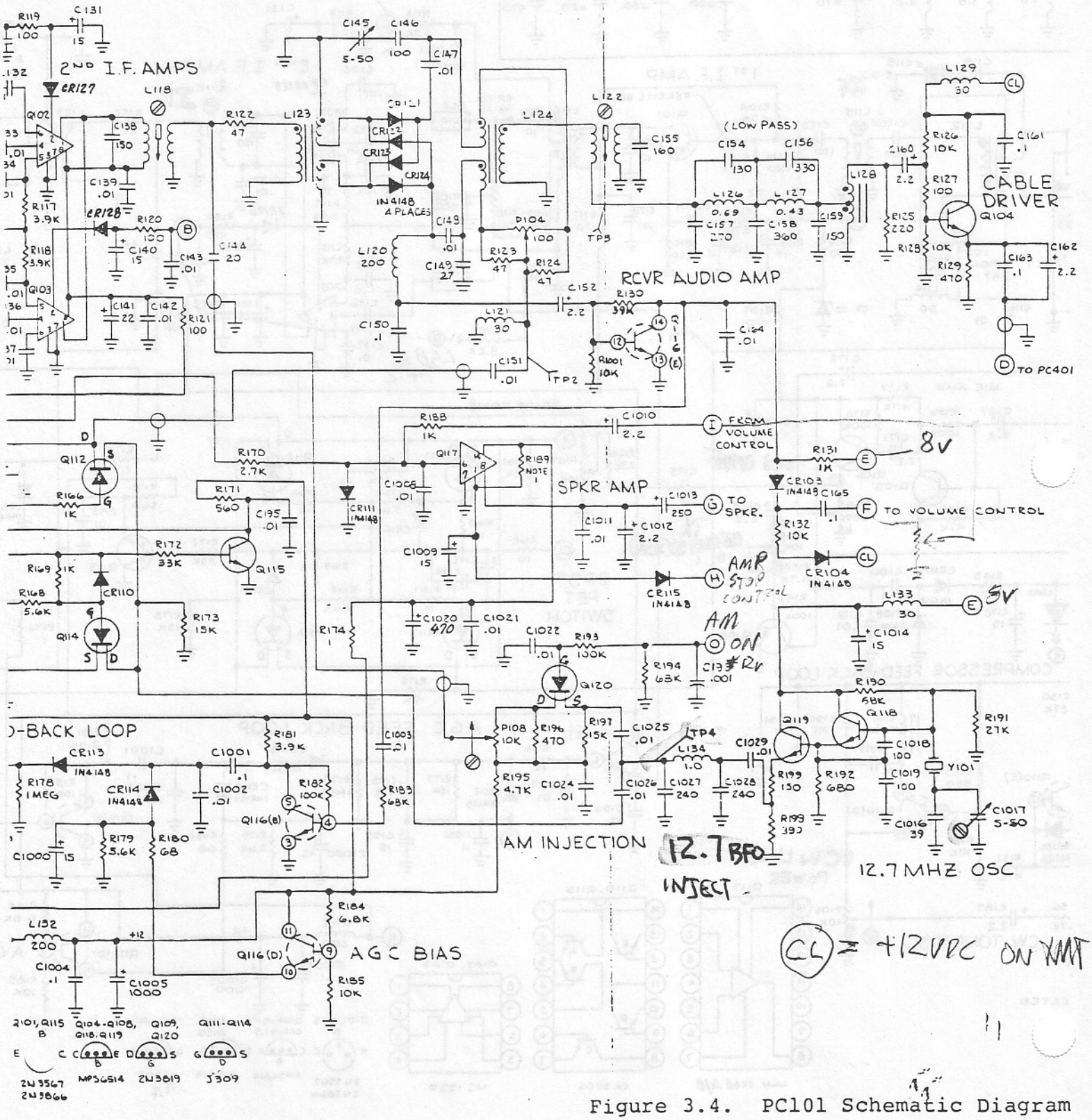

Figure 3.4. PC101 Schematic Diagram

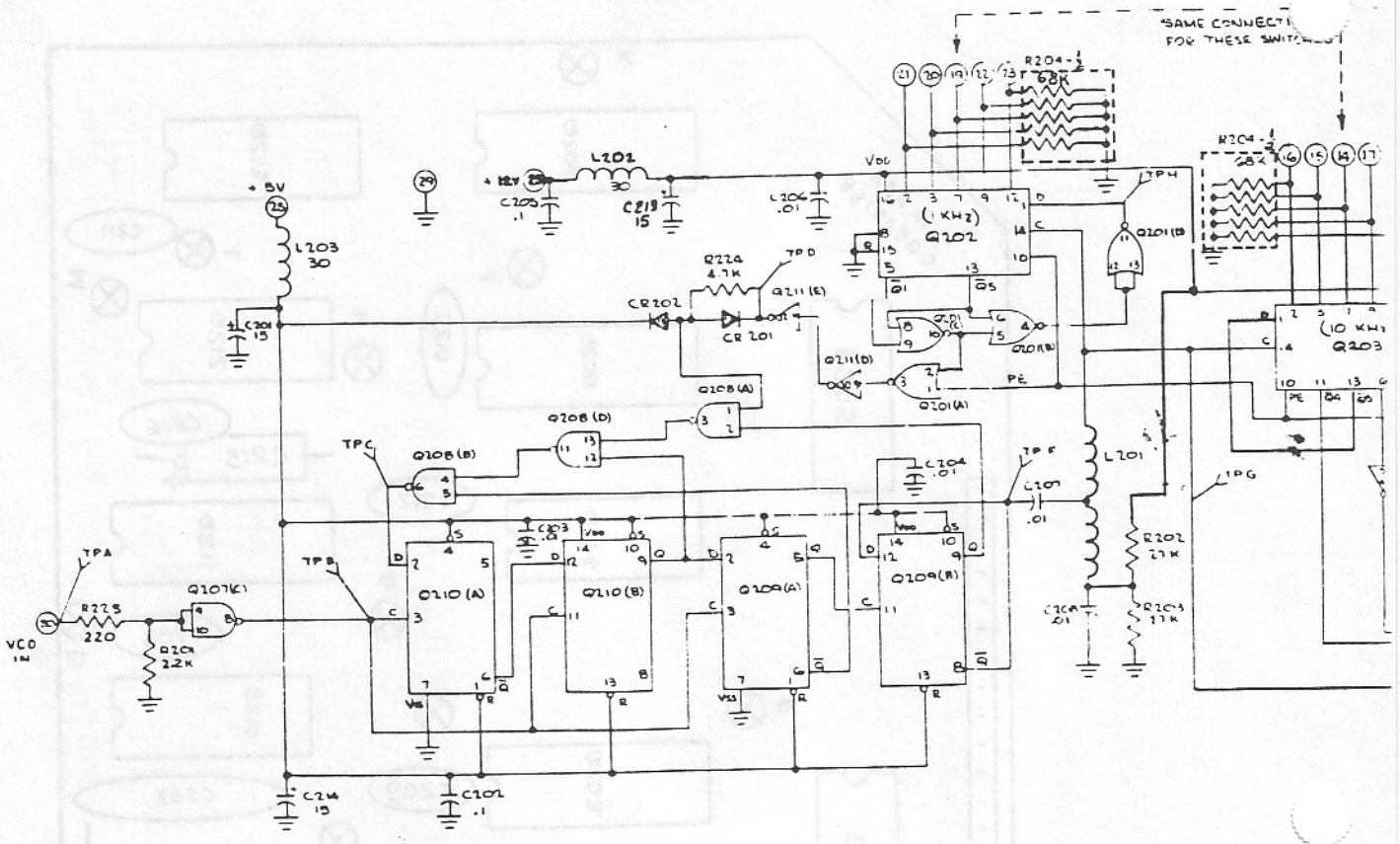
SAME CONNECTI
FOR THESE SWITCHES
R204-1
68K
R204-2
68K
L202
30
+12V
C209
.1
C219
15
L206
.01
VDD
TPH
(1 KHZ)
Q202
Q201(B)
+5V
L203
30
R224
4.7K
TPD
Q211(E)
CR202
CR201
C201
15
Q201(D)
Q201(C)
Q201(A)
PE
(10 KHZ)
Q203
Q208(A)
Q208(D)
TPC
Q208(B)
C204
.01
TPF
L207
.01
L201
TPG
R202
27K
R203
27K
C208
.01
C203
.01
TPA
TPB
Q207(E)
R223
220
VCO
IN
R209
22K
Q210(A)
Q210(B)
Q209(A)
Q209(B)
C214
15
C202
.1
Q201
CD4001 AE
Q207, Q208
SN 74 LS00
Q212
CD 4012
Q211
CD4049 A

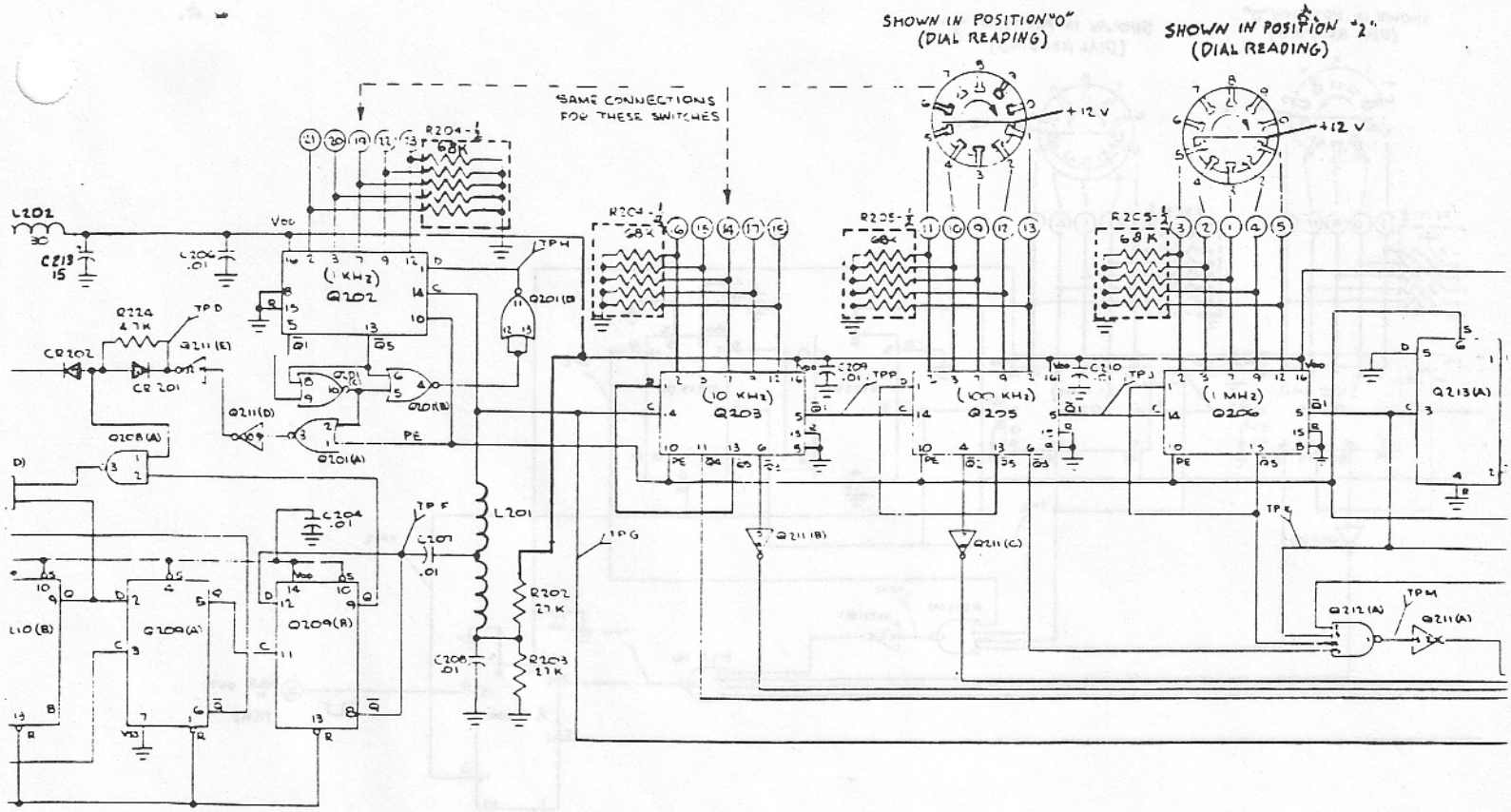

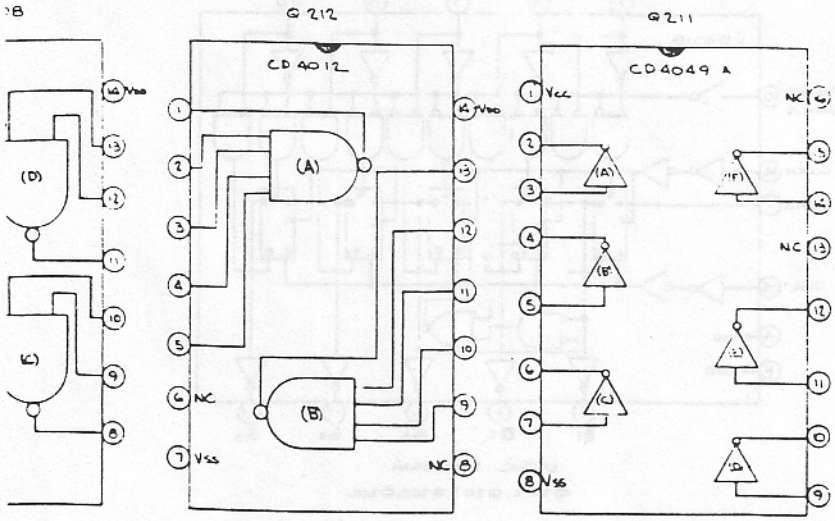

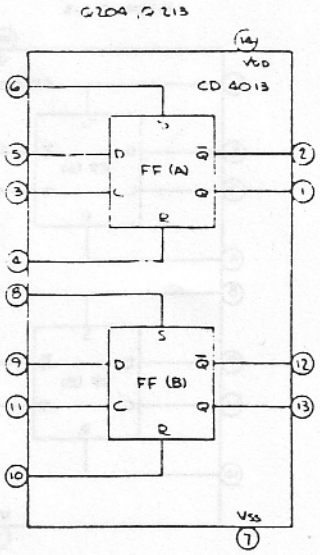

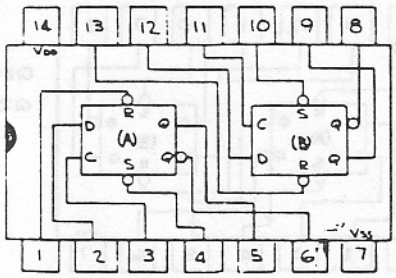

Q209
Q210 = SN7474

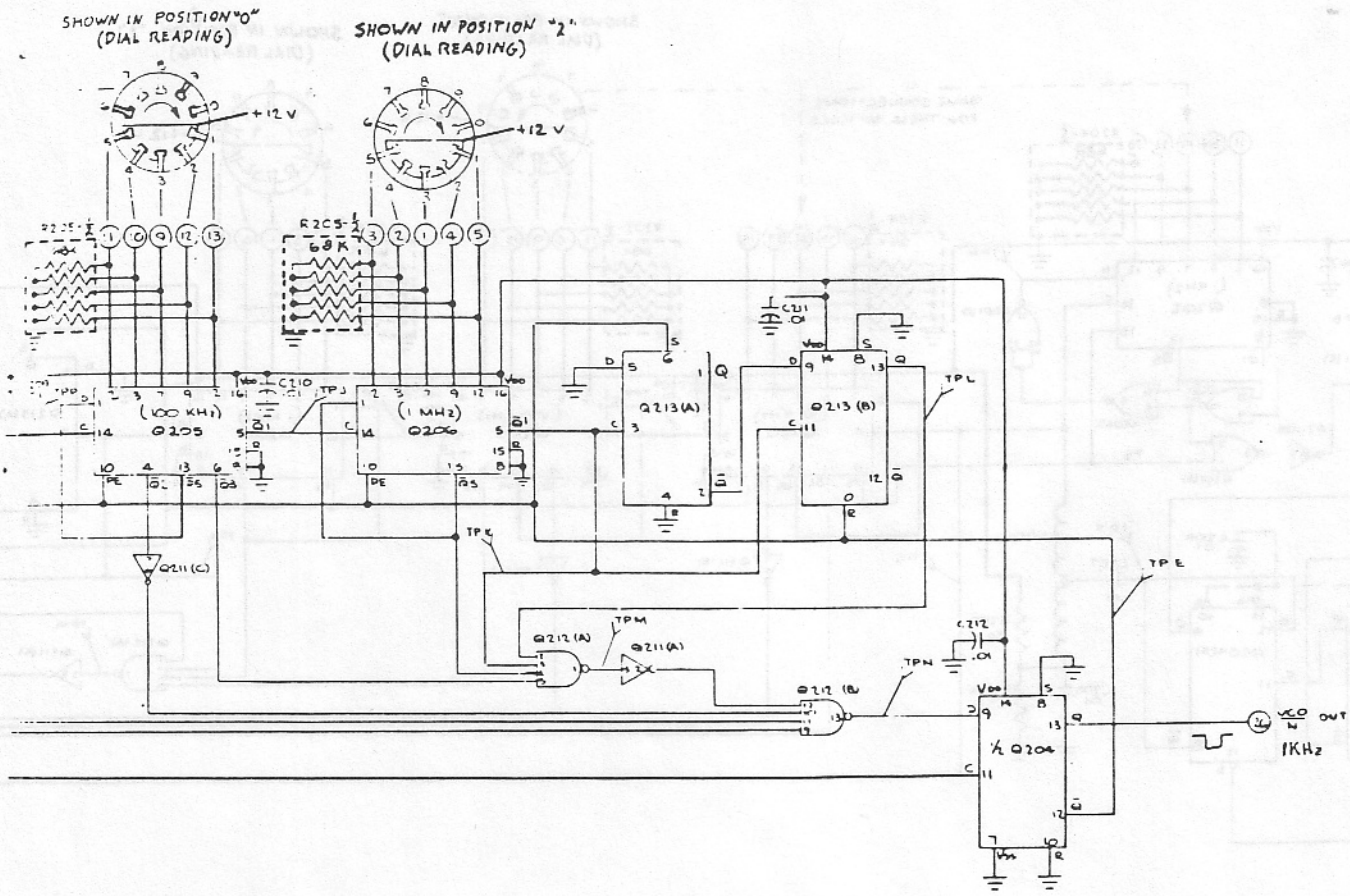

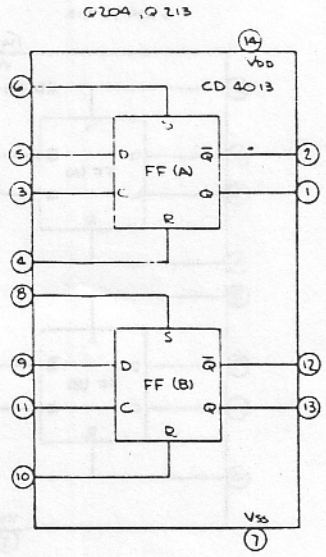

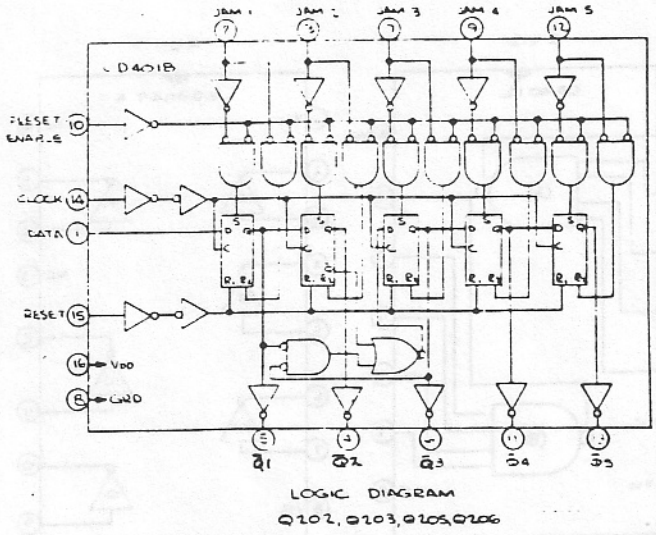

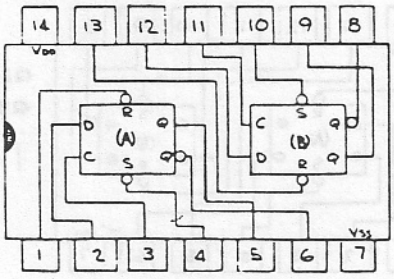

Q209
Q210 = SN7474

Figure 3.11. PC201 Schematic Diagram

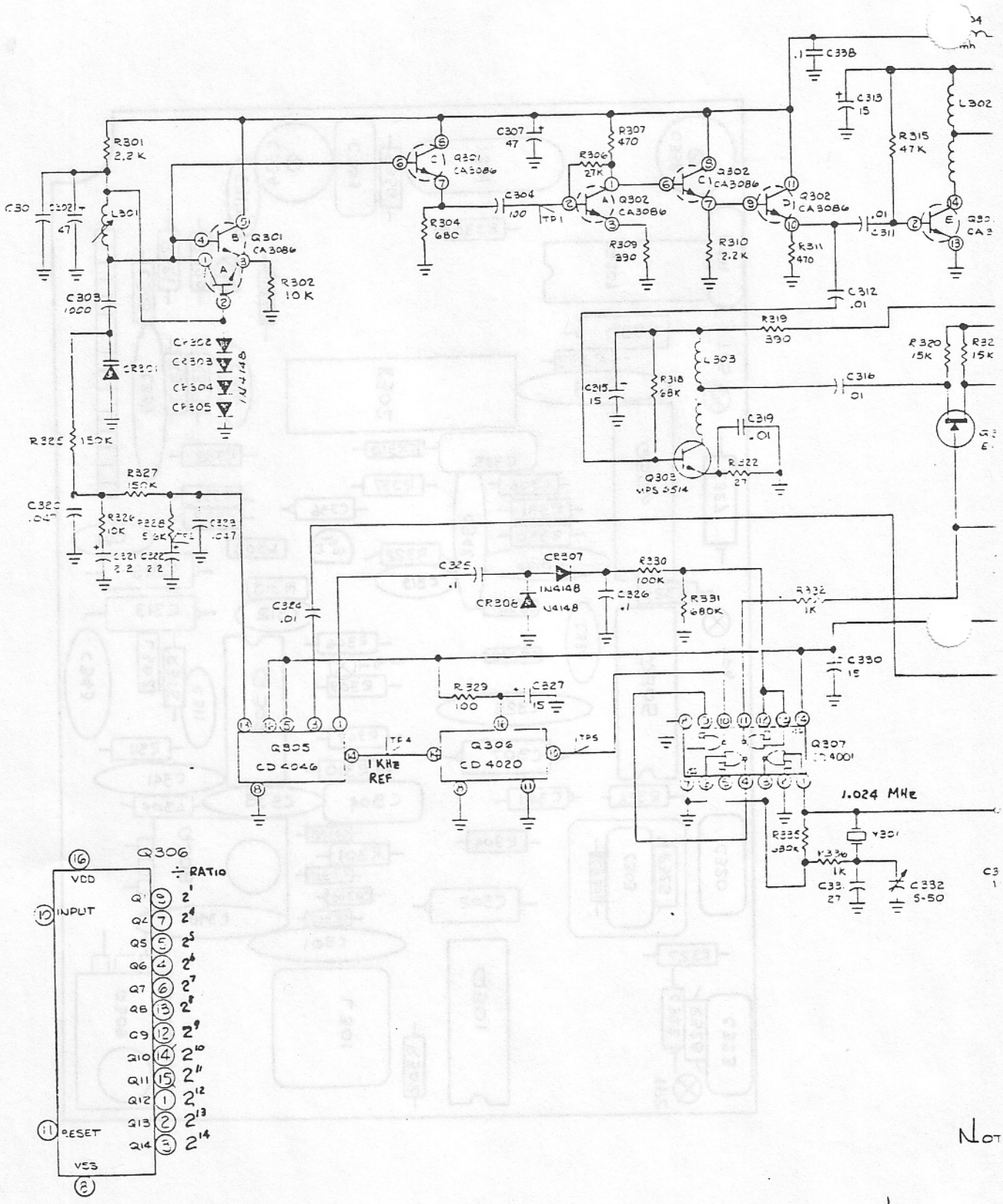
R301 2.2K
C30
C302 47
L301
C303 1000
CR301
R325 150K
R327 150K
C320 .047
R326 10K
R328 5.6K
C322 2.2
C323 .047
C321 2.2
C324 .01
C325 .1
CR307 1N4148
CR306 1N4148
R330 100K
C326 .1
R331 680K
R332 1K
C330 15
R329 100
C327 15
Q305 CD4046
Q306 CD4020
1 KHz REF
TP4
TP5
Q307 CD4001
1.024 MHz
Y301
R335 680K
R336 1K
C333 27
C332 5-50
Q301 CA3086
R302 10K
CR302
CR303
CR304
CR305
1N4148
C307 47
R304 680
C304 100
TP1
R306 27K
R307 470
Q302 CA3086
R309 390
R310 2.2K
R311 470
C311 .01
C312 .01
C338 .1
C313 15
L302
R315 47K
R319 390
L303
C315 15
R318 68K
C316 .01
C319 .01
R322 27
Q303 MPS 6514
R320 15K
Q306
÷ RATIO
VDD
INPUT
RESET
VSS
Q1 2^1
Q4 2^4
Q5 2^5
Q6 2^6
Q7 2^7
Q8 2^8
Q9 2^9
Q10 2^10
Q11 2^11
Q12 2^12
Q13 2^13
Q14 2^14

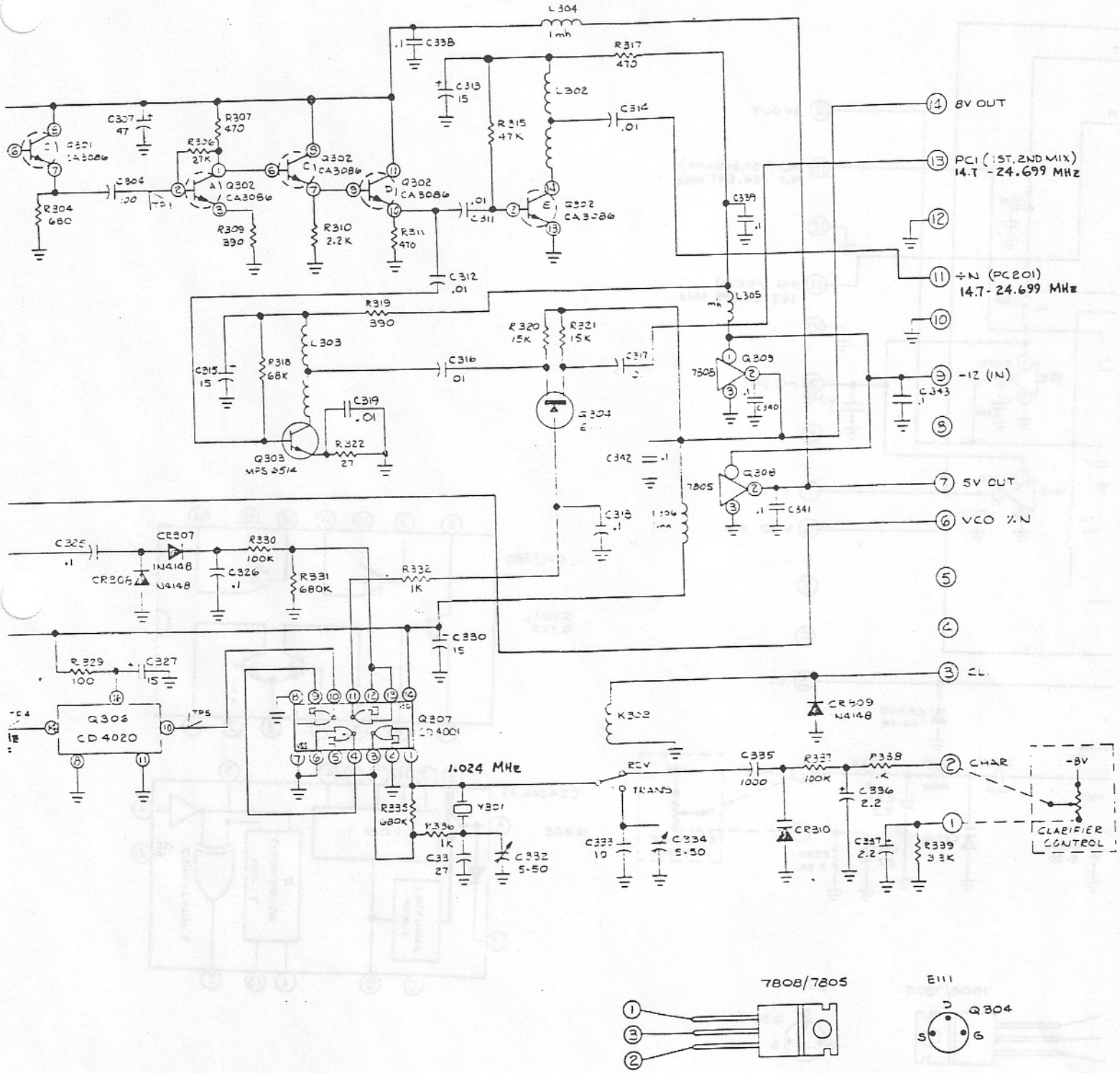

NOTES:

1. ALL POLARIZED DECIMAL CAPACITORS ARE IN MFD, ALL OTHERS ARE IN PF.
2. ALL INDUCTORS ARE IN MICRO HENRIES UNLESS OTHERWISE SPECIFIED.

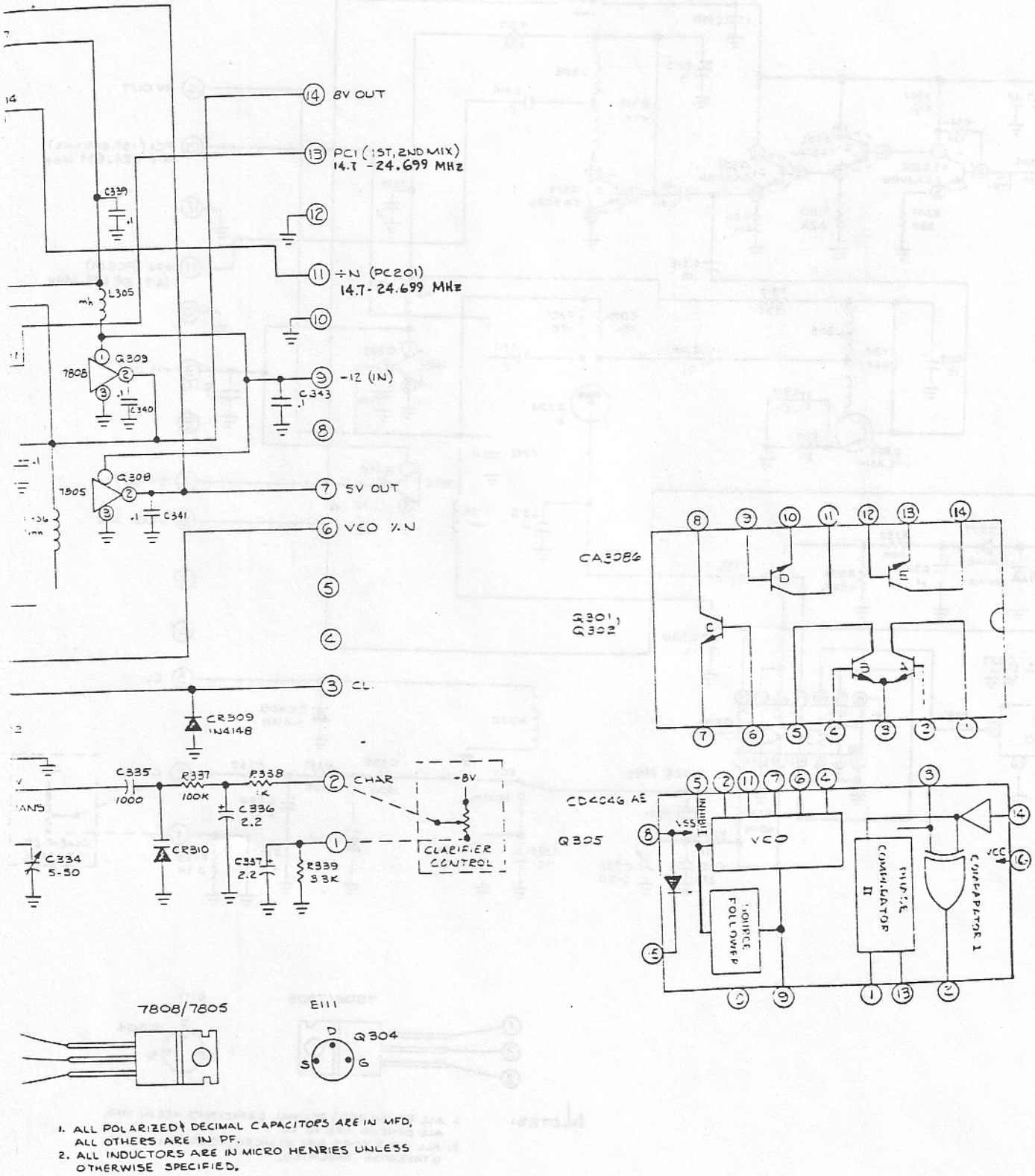

1. ALL POLARIZED DECIMAL CAPACITORS ARE IN MFD, ALL OTHERS ARE IN PF.
2. ALL INDUCTORS ARE IN MICRO HENRIES UNLESS OTHERWISE SPECIFIED.

Figure 3.9. PC301 Schematic Diagram

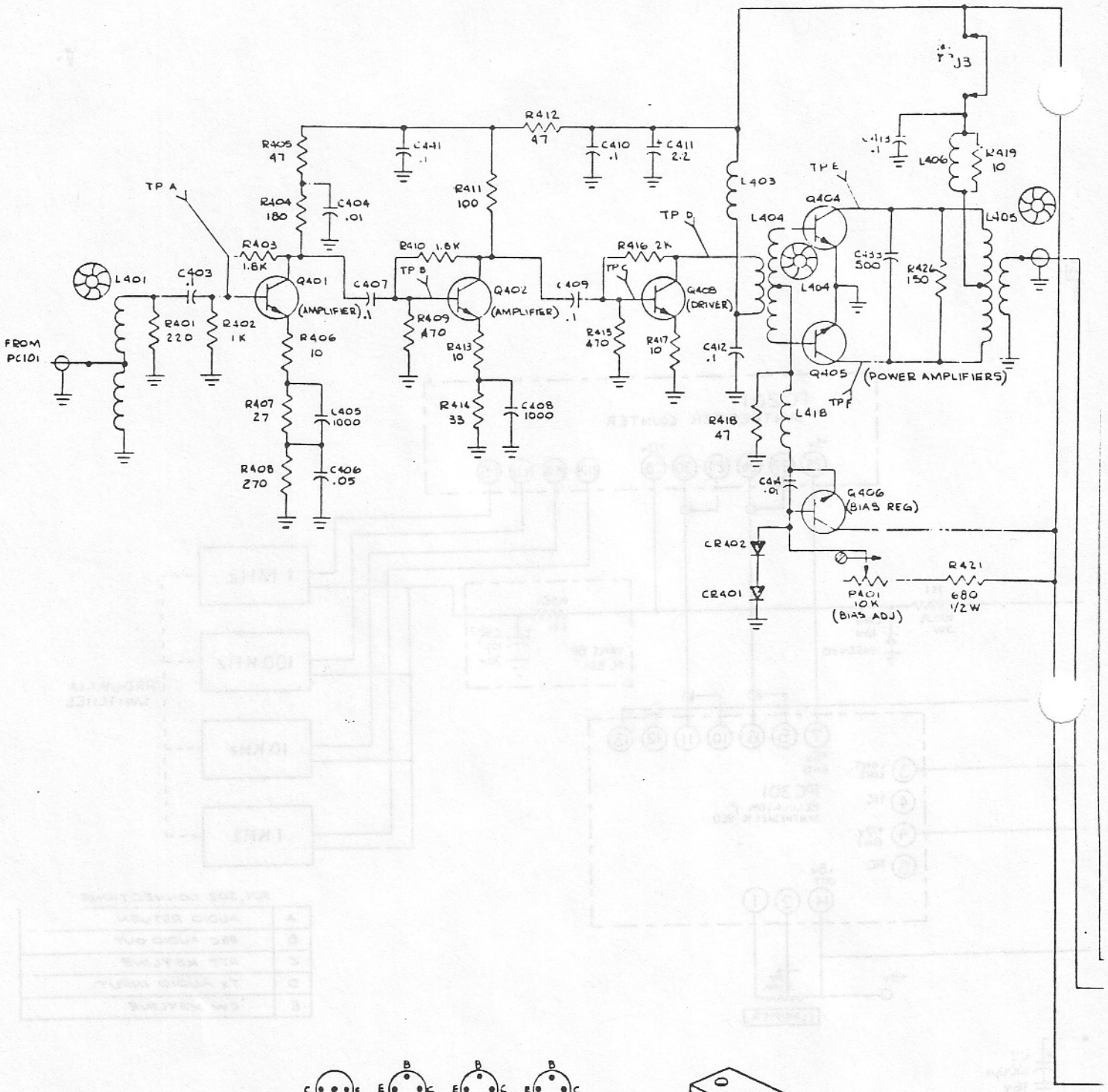

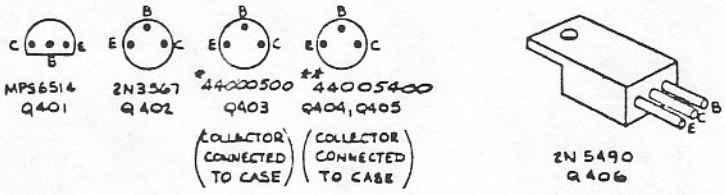

* SELECTED 2N 3866

** MATCHED PAIR-SELECTED 2N4932

NOTES: UNLESS OTHERWISE SPECIFIED

1. ALL POLARIZED AND DECIMAL CAPACITOR ARE IN MFD ALL OTHERS ARE IN PF.
2. ALL INDUCTORS ARE IN MICRO HENRYS.

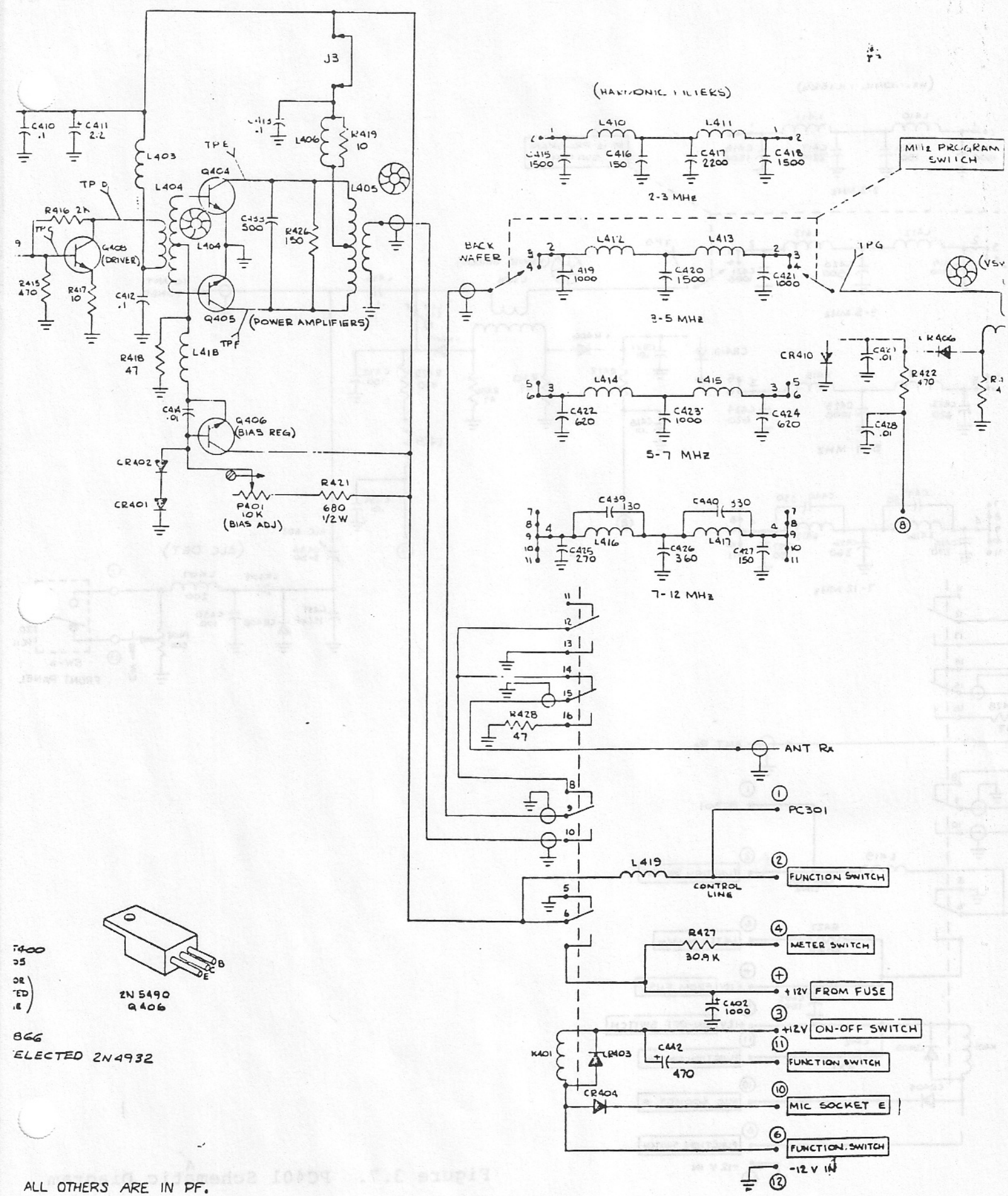
J3
C410 .1
C411 2.2
L403
TPE
TPD
Q404
L404
L405
R416 2K
TPC
Q403 (DRIVER)
R415 470
R417 10
C412 .1
C433 500
R426 150
Q405
(POWER AMPLIFIERS)
TPF
R418 47
L418
C414 .01
Q406 (BIAS REG)
CR402
CR401
P401 10K (BIAS ADJ)
R421 680 1/2W
L406
R419 10
(HARMONIC FILTERS)
L410
L411
C415 1500
C416 150
C417 2200
C418 1500
2-3 MHz
MHz PROGRAM SWITCH
BACK WAFER
L412
L413
C419 1000
C420 1500
C421 1000
3-5 MHz
TPG
CR410
C421 .01
CR406
R422 470
L414
L415
C422 620
C423 1000
C424 620
C428 .01
5-7 MHz
C439 130
C440 330
L416
L417
C425 270
C426 360
C427 150
7-12 MHz
R428 47
ANT Rx
PC301
L419
CONTROL LINE
FUNCTION SWITCH
R427 30.9K
METER SWITCH
+12V
FROM FUSE
C402 1000
+12V
ON-OFF SWITCH
K401
CR403
C442 470
FUNCTION SWITCH
CR404
MIC SOCKET E
FUNCTION SWITCH
-12 V IN
B
C
E
2N 5490
Q406
ELECTED 2N4932
ALL OTHERS ARE IN PF.

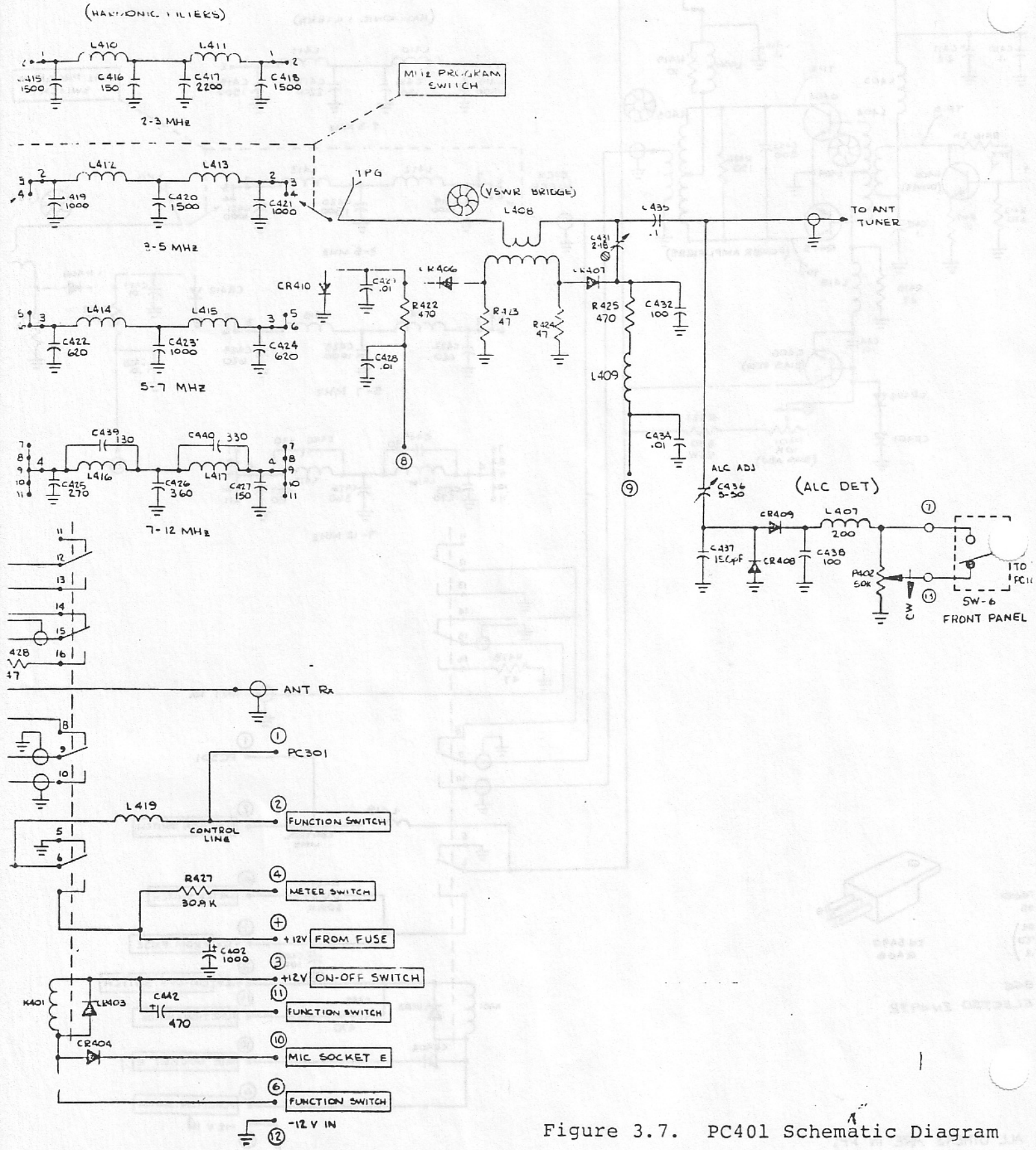

Figure 3.7. PC401 Schematic Diagram